ASTRALPOOL	DESPIECE	REV.: **2** FECHA: **16/02/2018** HOJA: **1 / 4**	**1090**

CODIGO **65557, 65558, 65560, 65561, 65562, 65563, 65564, 65565, 65566, 65567, 65569, 65570**

DESCRIPCION: **BOMBA VICTORIA PLUS SILENT**

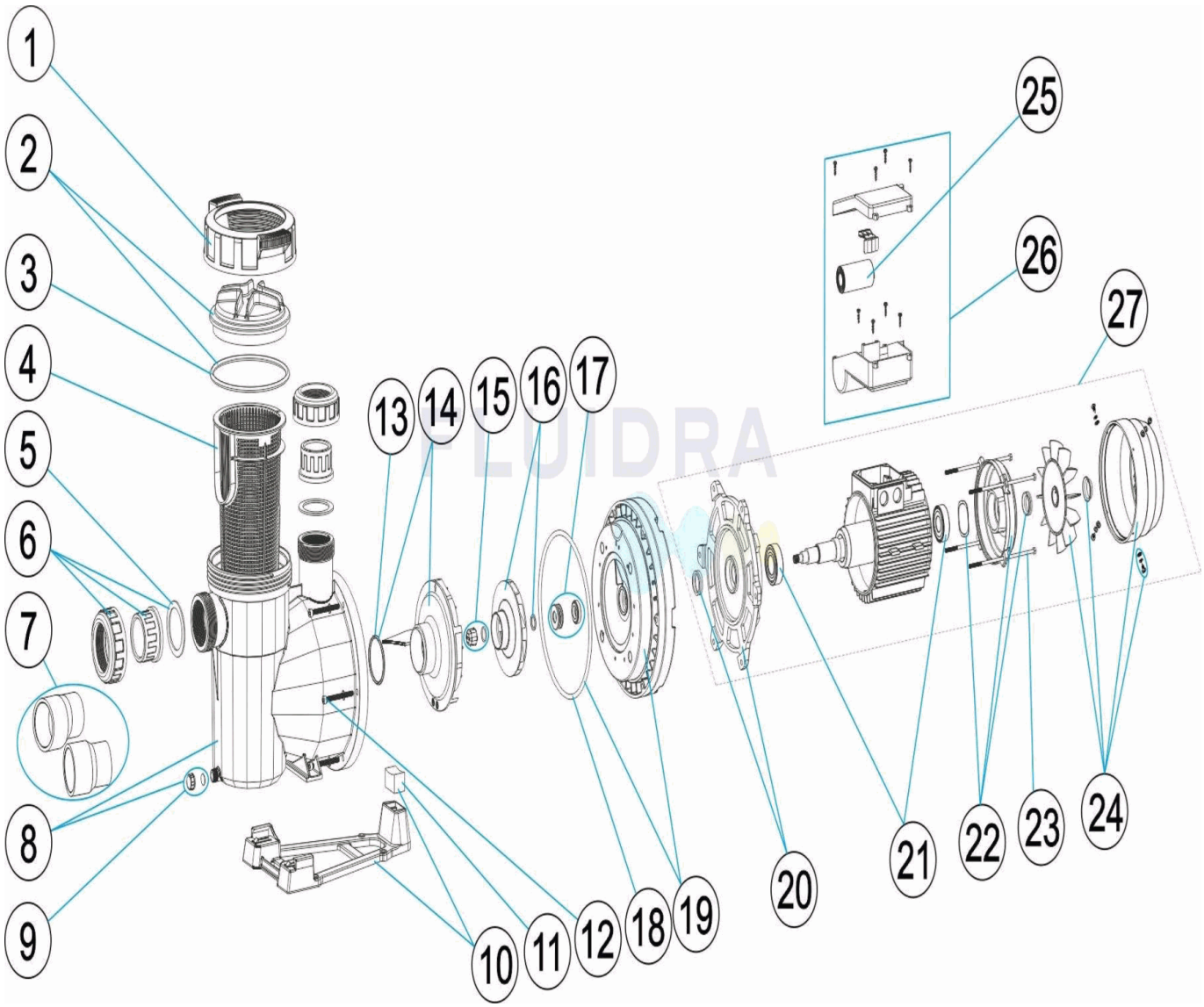

ESPAÑOL

POS	CODIGO	DESCRIPCION	POS	CODIGO	DESCRIPCION
1	4405010585	TUERCA TAPA PREFILTRO	11	* 4405010113	UNIÓN HIDRÁULICA PIE 1,5 HP - 3 HP
2	4405010702	TAPA PREFILTRO	11	* 4405010180	UNION HIDRAULICA PIE 3 HP II
3	4405010178	JUNTA TORICA D. 151,7X6,99	12	4405010590	TORNILLO FIJACION CUERPO
4	4405010105	CESTO PREFILTRO	13	4405010161	JUNTA TORICA D. 56,7X3,5
5	4405010179	JUNTA PLANA 72X55X2,5	14	* 4405010115	DIFUSOR <=0,75 HP
6	* 4405010106	ACCESORIOS ENLACE <= 1 HP	14	* 4405010116	DIFUSOR 1 HP - 2 HP
6	* 4405010107	ACCESORIOS ENLACE 1,5 HP - 2,5 HP	14	* 4405010117	DIFUSOR 2,5 - 3 HP
7	* 4405010717	ACCESORIOS ENLACE 3 HP	15	* 4405010134	TAPÓN RODETE M8 IZQUIERDA
8	4405010586	CUERPO BOMBA	16	* 4405010591	RODETE ½ (II) HP
9	4405010587	TAPON PURGA	16	* 4405010667	RODETE ½ (II) HP 60 HZ
10	* 4405010588	PIE BOMBA	16	* 4405010592	RODETE ½ (III) HP
10	* 4405010492	PIE BOMBA	16	* 4405010668	RODETE ½ (III) HP 60 HZ
10	* 4405010589	PIE BOMBA	16	* 4405010593	RODETE ¾ (II) HP

*** -> VER HOJA DE OBSERVACIONES**

CODIGO **65557, 65558, 65560, 65561, 65562, 65563, 65564, 65565, 65566, 65567, 65569, 65570**

DESCRIPCION: **BOMBA VICTORIA PLUS SILENT**

11	* 4405010112	UNIÓN HIDRÁULICA PIE 0,75 - 1,5 HP	16	* 4405010669	RODETE ¾ (II) HP 60 HZ
16	* 4405010594	RODETE ¾ (III) HP	23	* 4405010144	VARILLAS MOTOR 0,75 - 1 HP
16	* 4405010670	RODETE ¾ (III) HP 60 HZ	23	* 4405010145	VARILLAS MOTOR 1,5 - 3 HP III
16	* 4405010595	RODETE 1 (II) HP	23	* 4405010169	VARILLAS MOTOR (90) 3 HP II
16	* 4405010671	RODETE 1 (II) HP 60 HZ	24	* 4405010635	CJTO. VENTILADOR-TAPA
16	* 4405010596	RODETE 1 (III) HP	24	* 4405010636	CJTO. VENTILADOR-TAPA
16	* 4405010672	RODETE 1 (III) HP 60 HZ	24	* 4405010637	CJTO. VENTILADOR-TAPA
16	* 4405010597	RODETE 1,5 (II) HP	25	* 4405010149	CONDENSADOR 12 UF 1/2 CV
16	* 4405010673	RODETE 1,5 (II) HP 60 HZ	25	* 4405020121	CONDENSADOR 14 UF 3/4 CV
16	* 4405010598	RODETE 1,5 (III) HP	25	* 4405020122	CONDENSADOR 16 UF 1 CV
16	* 4405010674	RODETE 1,5 (III) HP 60 HZ	25	* 4405010150	CONDENSADOR 18 UF 1,5 CV
16	* 4405010599	RODETE 2 (II) HP	25	* 4405010174	CONDENSADOR 32 UF 2 CV
16	* 4405010675	RODETE 2 (II) HP 60 HZ	25	* 4405010175	CONDENSADOR 40 UF 2,5-3 CV
16	* 4405010600	RODETE 2 (III) HP	26	* 4405010154	CJTO. CAJA BORNES C. 63-71 II
16	* 4405010676	RODETE 2 (III) HP 60 HZ	26	* 4405012048	CJTO. CAJA BORNES (MOTOR II) C.80
16	* 4405010601	RODETE 3 (II) HP	26	* 4405010156	CJTO. CAJA BORNES C.63-71 III
16	* 4405010677	RODETE 3 (II) HP 60 HZ	26	* 4405012051	CJTO. CAJA BORNES (MOTOR III) C.80
16	* 4405010602	RODETE 3 (III) HP	26	* 4405012047	CJTO. CAJA BORNES (MOTOR II) C.71
16	* 4405010678	RODETE 3 (III) HP 60 HZ	26	* 4405012050	CJTO. CAJA BORNES (MOTOR III) C.71
17	4405010118	JUNTA MECÁNICA	27	* 65557R0475	MOTOR ½ HP II
18	4405010487	JUNTA TORICA	27	* 65558R0475	MOTOR 1/2 HP III
19	4405010603	BRIDA SELLO MECÁNICO	27	* 65560R0475	MOTOR 3/4 HP II
20	* 4405010604	BRIDA MOTOR DELANTERA	27	* 65561R0475	MOTOR 3/4 HP III
20	* 4405010607	BRIDA MOTOR DELANTERA	27	* 65562R0475	MOTOR 1 HP II
20	* 4405010608	BRIDA MOTOR DELANTERA	27	* 65563R0475	MOTOR 1 HP III
21	* 4405010609	RODAMIENTO MOTOR < 1 HP	27	* 65564R0475	MOTOR 1,5 HP II
21	* 4405010610	RODAMIENTO MOTOR 1,5 - 3 HP	27	* 65565R0475	MOTOR 1,5 HP III
21	* 4405012039	RODAMIENTO DELANTERO Y TRASERO	27	* 65566R0475	MOTOR 2 HP II
22	* 4405010612	TAPA MOTOR MEC. C.71 C/CAJERA D35	27	* 65567R0475	MOTOR 2 HP III
22	* 4405010614	TAPA MOTOR MEC. C.80 C/CAJERA D47	27	* 65569R0475	MOTOR 3 HP II
22	* 4405010615	TAPA MOTOR MEC. C.90 C/CAJERA D52	27	* 65570R0475	MOTOR 3 HP III

*** -> VER HOJA DE OBSERVACIONES**

CODIGO **65557, 65558, 65560, 65561, 65562, 65563, 65564, 65565, 65566, 65567, 65569, 65570**

DESCRIPCION: **BOMBA VICTORIA PLUS SILENT**

OBSERVACIONES

POS	CODIGO	OBSERVACIONES
6	4405010106	PARA: 65557, 65558, 65560, 65561, 65562, 65563
6	4405010107	PARA: 65564, 65565, 65566, 65567, 65569, 65570
7	4405010717	PARA: 65569, 65570
10	4405010588	PARA: 65557, 65558, 65560, 65561, 65562, 65563
10	4405010492	PARA: 65564, 65565, 65566, 65567, 65570
10	4405010589	PARA: 65569
11	4405010112	PARA: 65557, 65558, 65560, 65561, 65562, 65563
11	4405010113	PARA: 65564, 65565, 65566, 65567, 65570
11	4405010180	PARA: 65569
14	4405010115	PARA: 65557, 65558, 65560, 65561
14	4405010116	PARA: 65562, 65563, 65564, 65565, 65566, 65567
14	4405010117	PARA: 65569, 65570
15	4405010134	PARA: 65558, 65561, 65563, 65565, 65567, 65570
16	4405010591	PARA: 65557 50 HZ
16	4405010667	PARA: 65557 60 HZ
16	4405010592	PARA: 65558 50 HZ
16	4405010668	PARA: 65558 60 HZ
16	4405010593	PARA: 65560 50 HZ
16	4405010669	PARA: 65560 60 HZ
16	4405010594	PARA: 65561 50 HZ
16	4405010670	PARA: 65561 60 HZ
16	4405010595	PARA: 65562 50 HZ
16	4405010671	PARA: 65562 60 HZ
16	4405010596	PARA: 65563 50 HZ
16	4405010672	PARA: 65563 60 HZ
16	4405010597	PARA: 65564 50 HZ
16	4405010673	PARA: 65564 60 HZ
16	4405010598	PARA: 65565 50 HZ
16	4405010674	PARA: 65565 60 HZ
16	4405010599	PARA: 65566 50 HZ
16	4405010675	PARA: 65566 60 HZ
16	4405010600	PARA: 65567 50 HZ
16	4405010676	PARA: 65567 60 HZ
16	4405010601	PARA: 65569 50 HZ
16	4405010677	PARA: 65569 60 HZ
16	4405010602	PARA: 65570 50 HZ
16	4405010678	PARA: 65570 60 HZ
20	4405010604	PARA: 65557, 65558, 65560, 65561, 65562, 65563
20	4405010607	PARA: 65564, 65565, 65566, 65567, 65570
20	4405010608	PARA: 65569
21	4405010609	PARA: 65557, 65558, 65560, 65561, 65562, 65563
21	4405010610	PARA: 65564, 65565, 65566, 65567, 65570

CODIGO **65557, 65558, 65560, 65561, 65562, 65563, 65564, 65565, 65566, 65567, 65569, 65570**

DESCRIPCION: **BOMBA VICTORIA PLUS SILENT**

21	4405012039	PARA: 65569
22	4405010612	PARA: 65557, 65558, 65560, 65561, 65562, 65563
22	4405010614	PARA: 65564, 65565, 65566, 65567, 65570
22	4405010615	PARA: 65569
23	4405010144	PARA: 65557, 65558, 65560, 65561, 65562, 65563
23	4405010145	PARA: 65564, 65565, 65566, 65567, 65570
23	4405010169	PARA: 65569
24	4405010635	PARA: 65557, 65558, 65560, 65561, 65562, 65563
24	4405010636	PARA: 65564, 65565, 65566, 65567, 65570
24	4405010637	PARA: 65569
25	4405010149	PARA: 65557
25	4405020121	PARA: 65560
25	4405020122	PARA: 65562
25	4405010150	PARA: 65564
25	4405010174	PARA: 65566
25	4405010175	PARA: 65569
26	4405010154	PARA: 65557, 65560, 65562 MOTOR AURICPOOL
26	4405012048	PARA: 65564, 65566, 65569
26	4405010156	PARA: 65558, 65561, 65563 MOTOR AURICPOOL
26	4405012051	PARA: 65565, 65567, 65570
26	4405012047	PARA: 65557, 65560, 65562 MOTOR VERNIS
26	4405012050	PARA: 65558, 65561, 65563 MOTOR VERNIS
27	65557R0475	PARA: 65557
27	65558R0475	PARA: 65558
27	65560R0475	PARA: 65560
27	65561R0475	PARA: 65561
27	65562R0475	PARA: 65562
27	65563R0475	PARA: 65563
27	65564R0475	PARA: 65564
27	65565R0475	PARA: 65565
27	65566R0475	PARA: 65566
27	65567R0475	PARA: 65567
27	65569R0475	PARA: 65569
27	65570R0475	PARA: 65570

ÉCLATÉ

REV.: **2**
DATE: **16/02/2018**
PAG.: **1 / 4**

1090

CODE **65557, 65558, 65560, 65561, 65562, 65563, 65564, 65565, 65566, 65567, 65569, 65570**

DESCRIPTION: **POMPE VICTORIA PLUS SILENT**

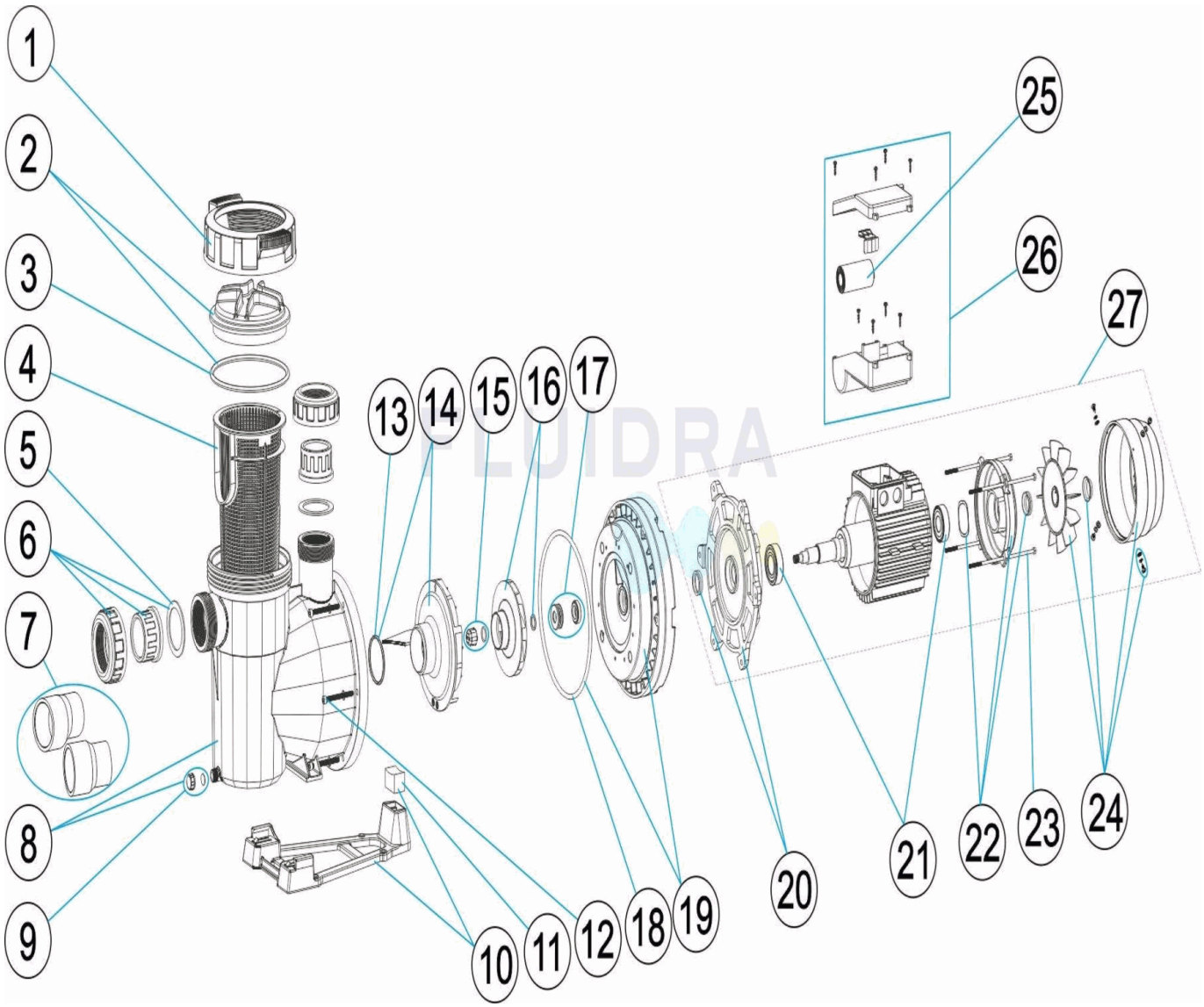

FRANCAIS

POS	CODE	DESCRIPTION	POS	CODE	DESCRIPTION
1	4405010585	ECROU COUVERCLE PREFILTRE	11	* 4405010113	RACCORD HYDRAULIQUE DE PIED 1,5 HP - 3 HP
2	4405010702	COUVERCLE PRÉFILTRE	11	* 4405010180	RACCORD HYDRAULIQUE DE PIED 3 HP II
3	4405010178	JOINT TORIQUE D 151,7X6,99	12	4405010590	VIS FIXATION CORPS
4	4405010105	PANIER PRÉFILTER	13	4405010161	JOINT TORIQUE D 56,7X3,5
5	4405010179	JOINT PLAT 72X55X2,5	14	* 4405010115	DIFFUSEUR <=0,75 HP
6	* 4405010106	RACCORDS UNION <= 1 HP	14	* 4405010116	DIFFUSEUR 1 HP - 2 HP
6	* 4405010107	RACCORDS UNION 1,5 HP - 2,5 HP	14	* 4405010117	DIFFUSEUR 2,5 - 3 HP
7	* 4405010717	RACCORDS UNION 3 HP	15	* 4405010134	BOUCHON BOUT AXE M8 IZQ.
8	4405010586	CORPS POMPE	16	* 4405010591	TURBINE ½ (II) HP
9	4405010587	BOUCHON DE PURGUE	16	* 4405010667	TURBINE ½ (II) HP 60 HZ
10	* 4405010588	SOCLE POMPE	16	* 4405010592	TURBINE ½ (III) HP
10	* 4405010492	SOCLE POMPE	16	* 4405010668	TURBINE ½ (III) HP 60 HZ
10	* 4405010589	SOCLE POMPE	16	* 4405010593	TURBINE ¾ (II) HP

*** -> VOIR FICHE D'OBSERVATIONS**

CODE **65557, 65558, 65560, 65561, 65562, 65563, 65564, 65565, 65566, 65567, 65569, 65570**

DESCRIPTION: **POMPE VICTORIA PLUS SILENT**

11	* 4405010112	RACCORD HYDRAULIQUE DE PIED 0,75 - 1,5 HP	16	* 4405010669	TURBINE ¾ (II) HP 60 HZ
16	* 4405010594	TURBINE ¾ (III) HP	23	* 4405010144	TIRANTS D'ACCOUPLEMENT MOTEUR 0,75 - 1 HP
16	* 4405010670	TURBINE ¾ (III) HP 60 HZ	23	* 4405010145	TIRANTS D'ACCOUPLEMENT MOTEUR 1,5 - 3 HP II
16	* 4405010595	TURBINE 1 (II) HP	23	* 4405010169	TIRANTS D'ACCOUPLEMENT MOTEUR (90) 3 HP II
16	* 4405010671	TURBINE 1 (II) HP 60 HZ	24	* 4405010635	ENSEMBLE COUVERCLE VENTILATEUR
16	* 4405010596	TURBINE 1 (III) HP	24	* 4405010636	ENSEMBLE COUVERCLE VENTILATEUR
16	* 4405010672	TURBINE 1 (III) HP 60 HZ	24	* 4405010637	ENSEMBLE COUVERCLE VENTILATEUR
16	* 4405010597	TURBINE 1,5 (II) HP	25	* 4405010149	CONDENSATEUR 12 UF 1/2 CV
16	* 4405010673	TURBINE 1,5 (II) HP 60 HZ	25	* 4405020121	CONDENSATEUR 14 UF 3/4 CV
16	* 4405010598	TURBINE 1,5 (III) HP	25	* 4405020122	CONDENSATEUR 16 UF 1 CV
16	* 4405010674	TURBINE 1,5 (III) HP 60 HZ	25	* 4405010150	CONDENSATEUR 18 UF
16	* 4405010599	TURBINE 2 (II) HP	25	* 4405010174	CONDENSATEUR 32 ?F 2 CV
16	* 4405010675	TURBINE 2 (II) HP 60 HZ	25	* 4405010175	CONDENSATEUR 40 ?F 2,5-3 CV
16	* 4405010600	TURBINE 2 (III) HP	26	* 4405010154	ENSEMBLE BOITIER CONNEXION C. 63-71 II
16	* 4405010676	TURBINE 2 (III) HP 60 HZ	26	* 4405012048	ENSEMBLE CAISSON BORNES (MOTEUR II) C.80
16	* 4405010601	TURBINE 3 (II) HP	26	* 4405010156	COUVERCLE BORNIER C 63-71 III
16	* 4405010677	TURBINE 3 (II) HP 60 HZ	26	* 4405012051	ENSEMBLE CAISSON BORNES (MOTEUR III) C.80
16	* 4405010602	TURBINE 3 (III) HP	26	* 4405012047	ENSEMBLE CAISSON BORNES (MOTEUR II) C.71
16	* 4405010678	TURBINE 3 (III) HP 60 HZ	26	* 4405012050	ENSEMBLE CAISSON BORNES (MOTEUR III) C.71
17	4405010118	GARNITURE MÉCANIQUE	27	* 65557R0475	MOTEUR ½ HP II
18	4405010487	JOINT TORIQUE	27	* 65558R0475	MOTEUR ½ HP III
19	4405010603	FLASQUE PORTE GRANITURE	27	* 65560R0475	MOTEUR 3/4 HP II
20	* 4405010604	BRIDE MOTEUR AVANT	27	* 65561R0475	MOTEUR 3/4 HP III
20	* 4405010607	BRIDE MOTEUR AVANT	27	* 65562R0475	MOTEUR 1 HP II
20	* 4405010608	BRIDE MOTEUR AVANT	27	* 65563R0475	MOTEUR 1 HP III
21	* 4405010609	ROULEMENT MOTEUR < 1 HP	27	* 65564R0475	MOTEUR 1,5 HP II
21	* 4405010610	ROULEMENT MOTEUR 1,5 - 3 HP	27	* 65565R0475	MOTEUR 1,5 HP III
21	* 4405012039	ROULEMENT AVANT & ARRIÈRE	27	* 65566R0475	MOTEUR 2 HP II
22	* 4405010612	COUVERCLE MOTEUR MEC. C.71 ET RAINURE D35	27	* 65567R0475	MOTEUR 2 HP III
22	* 4405010614	COUVERCLE MOTEUR MEC. C.80 ET RAINURE D47	27	* 65569R0475	MOTEUR 3 HP II
22	* 4405010615	COUVERCLE MOTEUR MEC. C.90 ET RAINURE D52	27	* 65570R0475	MOTEUR 3 HP III

*** -> VOIR FICHE D'OBSERVATIONS**

CODE **65557, 65558, 65560, 65561, 65562, 65563, 65564, 65565, 65566, 65567, 65569, 65570**

DESCRIPTION: **POMPE VICTORIA PLUS SILENT**

OBSERVATIONS

POS	CODE	OBSERVATIONS
6	4405010106	POUR: 65557, 65558, 65560, 65561, 65562, 65563
6	4405010107	POUR: 65564, 65565, 65566, 65567, 65569, 65570
7	4405010717	POUR: 65569, 65570
10	4405010588	POUR: 65557, 65558, 65560, 65561, 65562, 65563
10	4405010492	POUR: 65564, 65565, 65566, 65567, 65570
10	4405010589	POUR: 65569
11	4405010112	POUR: 65557, 65558, 65560, 65561, 65562, 65563
11	4405010113	POUR: 65564, 65565, 65566, 65567, 65570
11	4405010180	POUR: 65569
14	4405010115	POUR: 65557, 65558, 65560, 65561
14	4405010116	POUR: 65562, 65563, 65564, 65565, 65566, 65567
14	4405010117	POUR: 65569, 65570
15	4405010134	POUR: 65558, 65561, 65563, 65565, 65567, 65570
16	4405010591	POUR: 65557 50 HZ
16	4405010667	POUR: 65557 60 HZ
16	4405010592	POUR: 65558 50 HZ
16	4405010668	POUR: 65558 60 HZ
16	4405010593	POUR: 65560 50 HZ
16	4405010669	POUR: 65560 60 HZ
16	4405010594	POUR: 65561 50 HZ
16	4405010670	POUR: 65561 60 HZ
16	4405010595	POUR: 65562 50 HZ
16	4405010671	POUR: 65562 60 HZ
16	4405010596	POUR: 65563 50 HZ
16	4405010672	POUR: 65563 60 HZ
16	4405010597	POUR: 65564 50 HZ
16	4405010673	POUR: 65564 60 HZ
16	4405010598	POUR: 65565 50 HZ
16	4405010674	POUR: 65565 60 HZ
16	4405010599	POUR: 65566 50 HZ
16	4405010675	POUR: 65566 60 HZ
16	4405010600	POUR: 65567 50 HZ
16	4405010676	POUR: 65567 60 HZ
16	4405010601	POUR: 65569 50 HZ
16	4405010677	POUR: 65569 60 HZ
16	4405010602	POUR: 65570 50 HZ
16	4405010678	POUR: 65570 60 HZ
20	4405010604	POUR: 65557, 65558, 65560, 65561, 65562, 65563
20	4405010607	POUR: 65564, 65565, 65566, 65567, 65570
20	4405010608	POUR: 65569
21	4405010609	POUR: 65557, 65558, 65560, 65561, 65562, 65563
21	4405010610	POUR: 65564, 65565, 65566, 65567, 65570

CODE **65557, 65558, 65560, 65561, 65562, 65563, 65564, 65565, 65566, 65567, 65569, 65570**

DESCRIPTION: **POMPE VICTORIA PLUS SILENT**

21	4405012039	POUR: 65569
22	4405010612	POUR: 65557, 65558, 65560, 65561, 65562, 65563
22	4405010614	POUR: 65564, 65565, 65566, 65567, 65570
22	4405010615	POUR: 65569
23	4405010144	POUR: 65557, 65558, 65560, 65561, 65562, 65563
23	4405010145	POUR: 65564, 65565, 65566, 65567, 65570
23	4405010169	POUR: 65569
24	4405010635	POUR: 65557, 65558, 65560, 65561, 65562, 65563
24	4405010636	POUR: 65564, 65565, 65566, 65567, 65570
24	4405010637	POUR: 65569
25	4405010149	POUR: 65557
25	4405020121	POUR: 65560
25	4405020122	POUR: 65562
25	4405010150	POUR: 65564
25	4405010174	POUR: 65566
25	4405010175	POUR: 65569
26	4405010154	POUR: 65557, 65560, 65562 MOTOR AURICPOOL
26	4405012048	POUR: 65564, 65566, 65569
26	4405010156	POUR: 65558, 65561, 65563 MOTOR AURICPOOL
26	4405012051	POUR: 65565, 65567, 65570
26	4405012047	POUR: 65557, 65560, 65562 MOTOR VERNIS
26	4405012050	POUR: 65558, 65561, 65563 MOTOR VERNIS
27	65557R0475	POUR: 65557
27	65558R0475	POUR: 65558
27	65560R0475	POUR: 65560
27	65561R0475	POUR: 65561
27	65562R0475	POUR: 65562
27	65563R0475	POUR: 65563
27	65564R0475	POUR: 65564
27	65565R0475	POUR: 65565
27	65566R0475	POUR: 65566
27	65567R0475	POUR: 65567
27	65569R0475	POUR: 65569
27	65570R0475	POUR: 65570

PARTS BREAKDOWN

REV.: **2**
DATE: **16/02/2018**
SHEET: **1 / 4**

1090

CODE **65557, 65558, 65560, 65561, 65562, 65563, 65564, 65565, 65566, 65567, 65569, 65570**

DESCRIPTION: **VICTORIA PLUS SILENT PUMP**

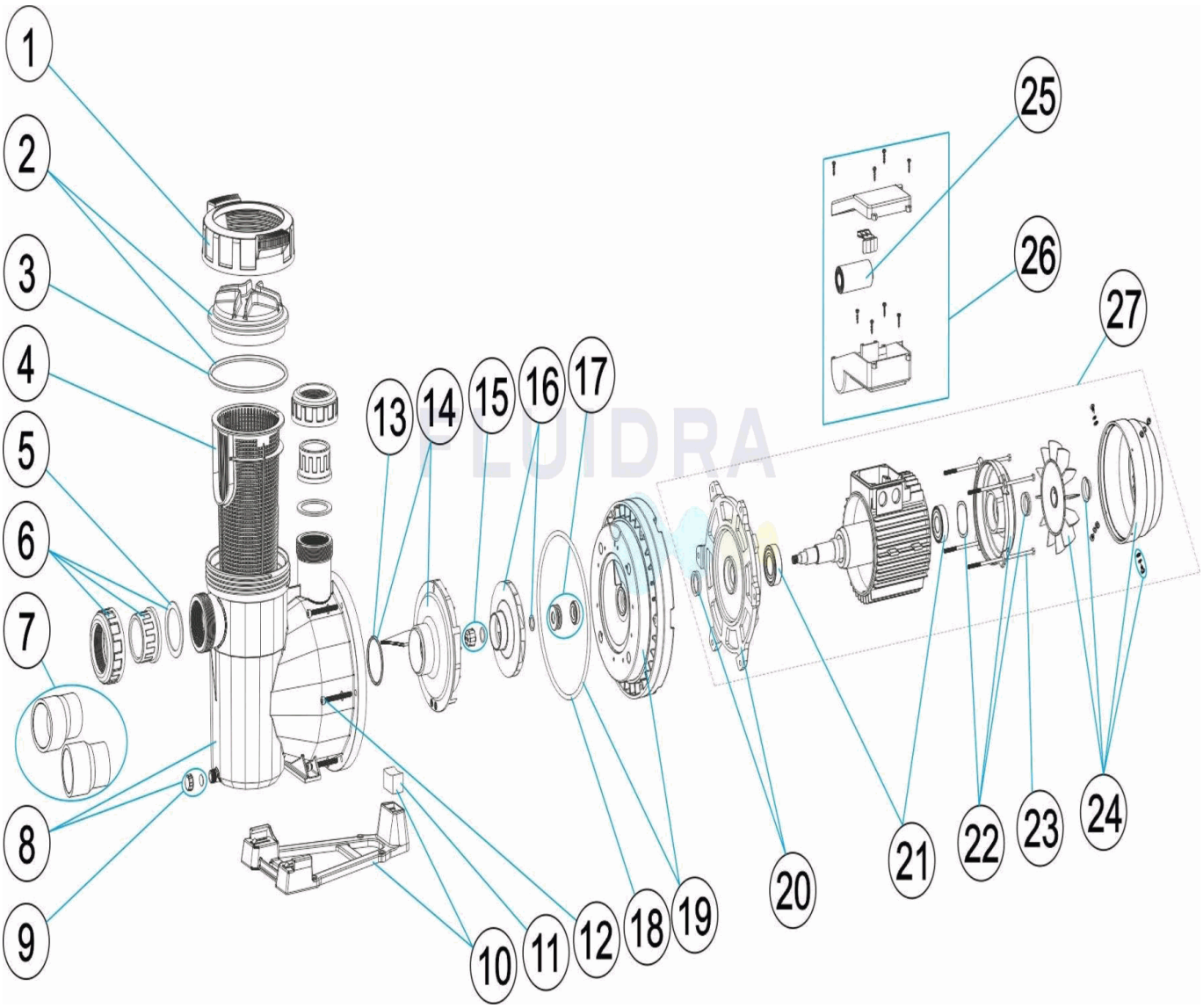

ENGLISH

POS	CODE	DESCRIPTION	POS	CODE	DESCRIPTION
1	4405010585	PRE-FILTER COVER NUT	11	* 4405010113	PUMP BASE FITTINGS 1,5 HP - 3 HP
2	4405010702	PRE-FILTER COVER	11	* 4405010180	PUMP BASE FITTINGS 3 HP II
3	4405010178	O' RING D 151,7X6,99	12	4405010590	BODY FIXING SCREW
4	4405010105	PRE-FILTER BASKET	13	4405010161	O' RING D. 56,7X3,5
5	4405010179	INLET GASKET 72X55X2,5	14	* 4405010115	DIFFUSEUR <=0,75 HP
6	* 4405010106	UNION FITTINGS <= 1 HP	14	* 4405010116	DIFFUSOR 1 HP - 2 HP
6	* 4405010107	UNION FITTINGS 1,5 HP - 2,5 HP	14	* 4405010117	DIFFUSOR 2,5 - 3 HP
7	* 4405010717	UNION FITTINGS 3 HP	15	* 4405010134	IMPELLER COVER M8 LEFT
8	4405010586	PUMP HOUSING	16	* 4405010591	IMPELLER ½ (II) HP
9	4405010587	DRAIN PLUG	16	* 4405010667	IMPELLER ½ (II) HP 60 HZ
10	* 4405010588	PUMP BASE	16	* 4405010592	IMPELLER ½ (III) HP
10	* 4405010492	PUMP BASE	16	* 4405010668	IMPELLER ½ (III) HP 60 HZ
10	* 4405010589	PUMP BASE	16	* 4405010593	IMPELLER ¾ (II) HP

*** -> SEE OBSERVATIONS SHEET**

CODE **65557, 65558, 65560, 65561, 65562, 65563, 65564, 65565, 65566, 65567, 65569, 65570**

DESCRIPTION: **VICTORIA PLUS SILENT PUMP**

11	* 4405010112	PUMP BASE FITTINGS 0,75 - 1,5 HP	16	* 4405010669	IMPELLER ¾ (II) HP 60 HZ
16	* 4405010594	IMPELLER ¾ (III) HP	23	* 4405010144	MOTOR TIES 0,75 - 1 HP
16	* 4405010670	IMPELLER ¾ (III) HP 60 HZ	23	* 4405010145	MOTOR TIES 1,5 - 3 HP III
16	* 4405010595	IMPELLER 1 (II) HP	23	* 4405010169	MOTOR TIES (90) 3 HP II
16	* 4405010671	IMPELLER 1 (II) HP 60 HZ	24	* 4405010635	FAN COVER ASSEMBLY
16	* 4405010596	IMPELLER 1 (III) HP	24	* 4405010636	FAN COVER ASSEMBLY
16	* 4405010672	IMPELLER 1 (III) HP 60 HZ	24	* 4405010637	FAN COVER ASSEMBLY
16	* 4405010597	IMPELLER 1,5 (II) HP	25	* 4405010149	CONDENSER 12 UF 1/2 CV
16	* 4405010673	IMPELLER 1,5 (II) HP 60 HZ	25	* 4405020121	CONDENSER 14 UF 3/4 CV
16	* 4405010598	IMPELLER 1,5 (III) HP	25	* 4405020122	CONDENSER 16 UF 1 CV
16	* 4405010674	IMPELLER 1,5 (III) HP 60 HZ	25	* 4405010150	CONDENSER 18 UF 1,5 CV
16	* 4405010599	IMPELLER 2 (II) HP	25	* 4405010174	CONDENSER 32 ?F 2 CV
16	* 4405010675	IMPELLER 2 (II) HP 60 HZ	25	* 4405010175	CONDENSER 40 ?F 2,5-3 CV
16	* 4405010600	IMPELLER 2 (III) HP	26	* 4405010154	TERMINAL BOX ASSEMBLY C. 63-71 II
16	* 4405010676	IMPELLER 2 (III) HP 60 HZ	26	* 4405012048	TERMINAL BOX ASSEMBLY (MOTOR II) C.80
16	* 4405010601	IMPELLER 3 (II) HP	26	* 4405010156	TERMINAL BOX COVER C 63-71 III
16	* 4405010677	IMPELLER 3 (II) HP 60 HZ	26	* 4405012051	TERMINAL BOX ASSEMBLY (MOTOR III) C.80
16	* 4405010602	IMPELLER 3 (III) HP	26	* 4405012047	TERMINAL BOX ASSEMBLY (MOTOR II) C.71
16	* 4405010678	IMPELLER 3 (III) HP 60 HZ	26	* 4405012050	TERMINAL BOX ASSEMBLY (MOTOR III) C.71
17	4405010118	MECHANICAL SEAL	27	* 65557R0475	MOTOR ½ HP II
18	4405010487	O' RING	27	* 65558R0475	MOTOR ½ HP III
19	4405010603	MECHANICAL SEAL PLATE	27	* 65560R0475	MOTOR 3/4 HP II
20	* 4405010604	FRONT MOTOR FLANGE	27	* 65561R0475	MOTOR 3/4 HP III
20	* 4405010607	FRONT MOTOR FLANGE	27	* 65562R0475	MOTOR 1 HP II
20	* 4405010608	FRONT MOTOR FLANGE	27	* 65563R0475	MOTOR 1 HP III
21	* 4405010609	MOTOR BEARINGS < 1 HP	27	* 65564R0475	MOTOR 1,5 HP II
21	* 4405010610	MOTOR BEARINGS 1,5 - 3 HP	27	* 65565R0475	MOTOR 1,5 HP III
21	* 4405012039	FRONT & REAR BEARING	27	* 65566R0475	MOTOR 2 HP II
22	* 4405010612	MEC. MOTOR COVER C.71	27	* 65567R0475	MOTOR 2 HP III
22	* 4405010614	MEC. MOTOR COVER C.80	27	* 65569R0475	MOTOR 3 HP II
22	* 4405010615	MEC. MOTOR COVER C.90	27	* 65570R0475	MOTOR 3 HP III

*** -> SEE OBSERVATIONS SHEET**

CODE **65557, 65558, 65560, 65561, 65562, 65563, 65564, 65565, 65566, 65567, 65569, 65570**

DESCRIPTION: **VICTORIA PLUS SILENT PUMP**

OBSERVATIONS

POS	CODE	OBSERVATIONS
6	4405010106	FOR: 65557, 65558, 65560, 65561, 65562, 65563
6	4405010107	FOR: 65564, 65565, 65566, 65567, 65569, 65570
7	4405010717	FOR: 65569, 65570
10	4405010588	FOR: 65557, 65558, 65560, 65561, 65562, 65563
10	4405010492	FOR: 65564, 65565, 65566, 65567, 65570
10	4405010589	FOR: 65569
11	4405010112	FOR: 65557, 65558, 65560, 65561, 65562, 65563
11	4405010113	FOR: 65564, 65565, 65566, 65567, 65570
11	4405010180	FOR: 65569
14	4405010115	FOR: 65557, 65558, 65560, 65561
14	4405010116	FOR: 65562, 65563, 65564, 65565, 65566, 65567
14	4405010117	FOR: 65569, 65570
15	4405010134	FOR: 65558, 65561, 65563, 65565, 65567, 65570
16	4405010591	FOR: 65557 50 HZ
16	4405010667	FOR: 65557 60 HZ
16	4405010592	FOR: 65558 50 HZ
16	4405010668	FOR: 65558 60 HZ
16	4405010593	FOR: 65560 50 HZ
16	4405010669	FOR: 65560 60 HZ
16	4405010594	FOR: 65561 50 HZ
16	4405010670	FOR: 65561 60 HZ
16	4405010595	FOR: 65562 50 HZ
16	4405010671	FOR: 65562 60 HZ
16	4405010596	FOR: 65563 50 HZ
16	4405010672	FOR: 65563 60 HZ
16	4405010597	FOR: 65564 50 HZ
16	4405010673	FOR: 65564 60 HZ
16	4405010598	FOR: 65565 50 HZ
16	4405010674	FOR: 65565 60 HZ
16	4405010599	FOR: 65566 50 HZ
16	4405010675	FOR: 65566 60 HZ
16	4405010600	FOR: 65567 50 HZ
16	4405010676	FOR: 65567 60 HZ
16	4405010601	FOR: 65569 50 HZ
16	4405010677	FOR: 65569 60 HZ
16	4405010602	FOR: 65570 50 HZ
16	4405010678	FOR: 65570 60 HZ
20	4405010604	FOR: 65557, 65558, 65560, 65561, 65562, 65563
20	4405010607	FOR: 65564, 65565, 65566, 65567, 65570
20	4405010608	FOR: 65569
21	4405010609	FOR: 65557, 65558, 65560, 65561, 65562, 65563
21	4405010610	FOR: 65564, 65565, 65566, 65567, 65570

* -> SEE OBSERVATIONS SHEET

CODE **65557, 65558, 65560, 65561, 65562, 65563, 65564, 65565, 65566, 65567, 65569, 65570**

DESCRIPTION: **VICTORIA PLUS SILENT PUMP**

21	4405012039	FOR: 65569
22	4405010612	FOR: 65557, 65558, 65560, 65561, 65562, 65563
22	4405010614	FOR: 65564, 65565, 65566, 65567, 65570
22	4405010615	FOR: 65569
23	4405010144	FOR: 65557, 65558, 65560, 65561, 65562, 65563
23	4405010145	FOR: 65564, 65565, 65566, 65567, 65570
23	4405010169	FOR: 65569
24	4405010635	FOR: 65557, 65558, 65560, 65561, 65562, 65563
24	4405010636	FOR: 65564, 65565, 65566, 65567, 65570
24	4405010637	FOR: 65569
25	4405010149	FOR: 65557
25	4405020121	FOR: 65560
25	4405020122	FOR: 65562
25	4405010150	FOR: 65564
25	4405010174	FOR: 65566
25	4405010175	FOR: 65569
26	4405010154	FOR: 65557, 65560, 65562 MOTOR AURICPOOL
26	4405012048	FOR: 65564, 65566, 65569
26	4405010156	FOR: 65558, 65561, 65563 MOTOR AURICPOOL
26	4405012051	FOR: 65565, 65567, 65570
26	4405012047	FOR: 65557, 65560, 65562 MOTOR VERNIS
26	4405012050	FOR: 65558, 65561, 65563 MOTOR VERNIS
27	65557R0475	FOR: 65557
27	65558R0475	FOR: 65558
27	65560R0475	FOR: 65560
27	65561R0475	FOR: 65561
27	65562R0475	FOR: 65562
27	65563R0475	FOR: 65563
27	65564R0475	FOR: 65564
27	65565R0475	FOR: 65565
27	65566R0475	FOR: 65566
27	65567R0475	FOR: 65567
27	65569R0475	FOR: 65569
27	65570R0475	FOR: 65570

CODICE **65557, 65558, 65560, 65561, 65562, 65563, 65564, 65565, 65566, 65567, 65569, 65570**

DESCRIZIONE: **POMPA VICTORIA PLUS SILENT**

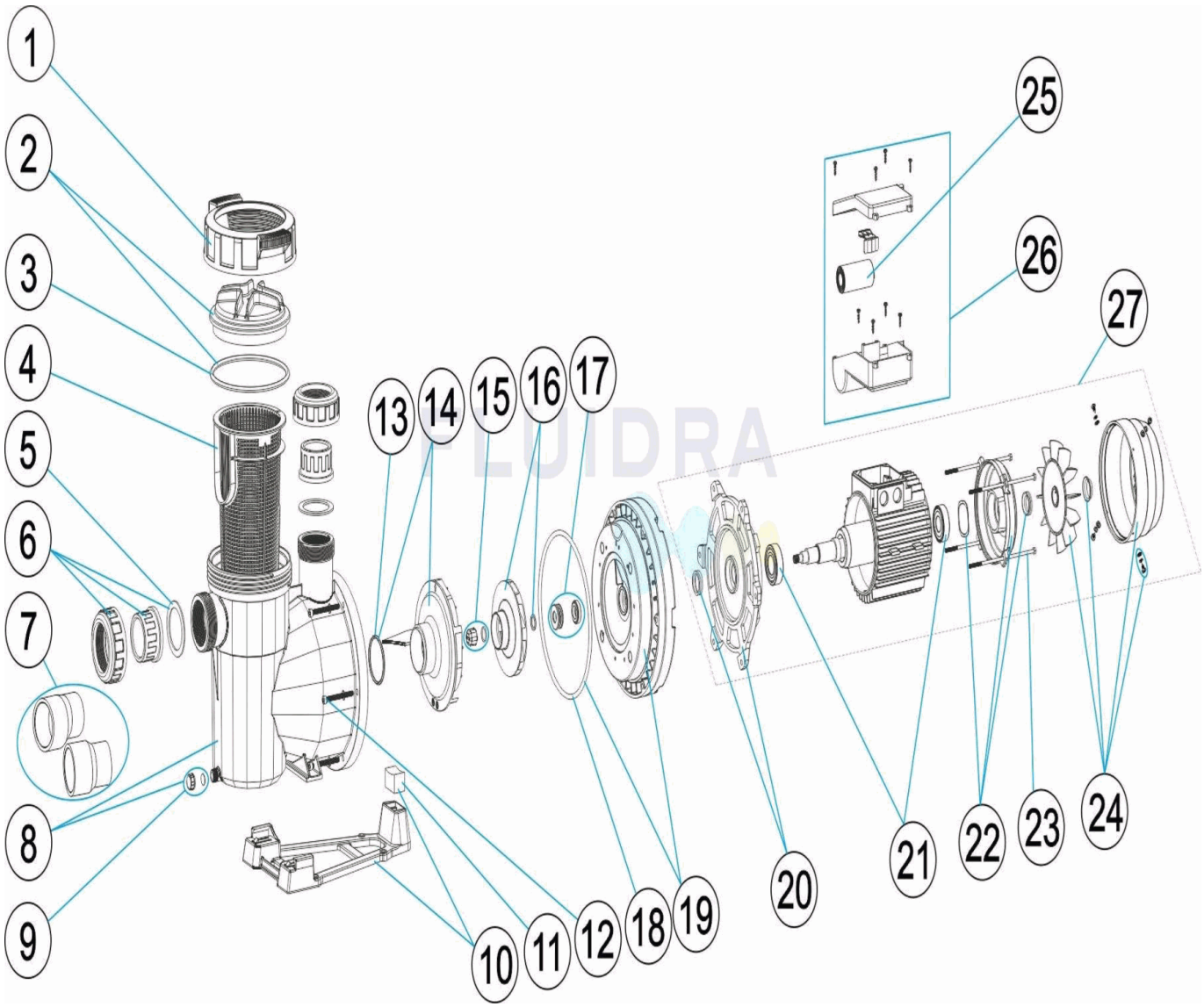

ITALIANO

POS	CODICE	DESCRIZIONE	POS	CODICE	DESCRIZIONE
1	4405010585	VITE COPERCHIO PREFILTRO	11	* 4405010113	UNIONE PARTE HIDRAULICA-BASE 1,5 HP - 3 HP
2	4405010702	COPERCHIO PREFILTRO	11	* 4405010180	UNIONS PARTE HIDRAULICA-BASE POMPA 3 HP II
3	4405010178	O-RING D 151,7X6,99	12	4405010590	VITE FISSAGGIO CORPO
4	4405010105	CESTO PREFILTRO	13	4405010161	O-RING D 56,7X3,5
5	4405010179	GUERNICIONE PIANA 72X55X2,5	14	* 4405010115	DIFFUSORE <=0,75 HP
6	* 4405010106	MANICOTTI DI UNIONE <= 1 HP	14	* 4405010116	DIFFUSORE 1 HP - 2 HP
6	* 4405010107	MANICOTTI DI UNIONE 1,5 HP - 2,5 HP	14	* 4405010117	DIFFUSORE 2,5 - 3 HP
7	* 4405010717	MANICOTTI DI UNIONE 3 HP	15	* 4405010134	TAPPO RUOTA M8 SIN.
8	4405010586	CORPO BOMBA	16	* 4405010591	RUOTA ½ (II) HP
9	4405010587	TAPPO SCARICO	16	* 4405010667	RUOTA ½ (II) HP 60 HZ
10	* 4405010588	BASAMENTO POMPA	16	* 4405010592	RUOTA ½ (III) HP
10	* 4405010492	BASAMENTO POMPA	16	* 4405010668	RUOTA ½ (III) HP 60 HZ
10	* 4405010589	BASAMENTO POMPA	16	* 4405010593	RUOTA ¾ (II) HP

*** -> SI FACCIA RIFERIMENTO AL FOGLIO DELLE OSSERVAZIONI**

CODICE **65557, 65558, 65560, 65561, 65562, 65563, 65564, 65565, 65566, 65567, 65569, 65570**

DESCRIZIONE: **POMPA VICTORIA PLUS SILENT**

11	* 4405010112	UNIONE PARTE HIDRAULICA-BASE 0,75 - 1,5 HP	16	* 4405010669	RUOTA ¾ (II) HP 60 HZ
16	* 4405010594	RUOTA ¾ (III) HP	23	* 4405010144	ASTAS MOTORE 0,75 - 1 HP
16	* 4405010670	RUOTA ¾ (III) HP 60 HZ	23	* 4405010145	ASTAS MOTORE 1,5 - 3 HP III
16	* 4405010595	RUOTA 1 (II) HP	23	* 4405010169	ASTAS MOTORE (90) 3 HP II
16	* 4405010671	RUOTA 1 (II) HP 60 HZ	24	* 4405010635	KIT VENTOLA-COPRIVENTOLA
16	* 4405010596	RUOTA 1 (III) HP	24	* 4405010636	KIT VENTOLA-COPRIVENTOLA
16	* 4405010672	RUOTA 1 (III) HP 60 HZ	24	* 4405010637	KIT VENTOLA-COPRIVENTOLA
16	* 4405010597	RUOTA 1,5 (II) HP	25	* 4405010149	CONDENSATORE 12 UF 1/2 CV
16	* 4405010673	RUOTA 1,5 (II) HP 60 HZ	25	* 4405020121	CONDENSATORE 14 UF 3/4 CV
16	* 4405010598	RUOTA 1,5 (III) HP	25	* 4405020122	CONDENSATORE 16 UF 1 CV
16	* 4405010674	RUOTA 1,5 (III) HP 60 HZ	25	* 4405010150	CONDENSATORE 18 UF 1,5 CV
16	* 4405010599	RUOTA 2 (II) HP	25	* 4405010174	CONDENSATORE 32 ?F 2 CV
16	* 4405010675	RUOTA 2 (II) HP 60 HZ	25	* 4405010175	CONDENSATORE 40 ?F 2,5-3 CV
16	* 4405010600	RUOTA 2 (III) HP	26	* 4405010154	GRUPPO MORSETTIERA C. 63-71 II
16	* 4405010676	RUOTA 2 (III) HP 60 HZ	26	* 4405012048	SET CASSETTA TERMINALI (MOTORE II) C.80
16	* 4405010601	RUOTA 3 (II) HP	26	* 4405010156	COPERCHIO MORSETTIERA C 63-71 III
16	* 4405010677	RUOTA 3 (II) HP 60 HZ	26	* 4405012051	SET CASSETTA TERMINALI (MOTORE III) C.80
16	* 4405010602	RUOTA 3 (III) HP	26	* 4405012047	SET CASSETTA TERMINALI (MOTORE II) C.71
16	* 4405010678	RUOTA 3 (III) HP 60 HZ	26	* 4405012050	SET CASSETTA TERMINALI (MOTORE III) C.71
17	4405010118	GUARNIZIONE MECCANICA	27	* 65557R0475	MOTOR ½ HP II
18	4405010487	O-RING	27	* 65558R0475	MOTOR ½ HP III
19	4405010603	FLANGIA TENUTA MECCANICA	27	* 65560R0475	MOTOR 3/4 HP II
20	* 4405010604	FASCETTA MOTORE ANTERIORE	27	* 65561R0475	MOTOR 3/4 HP III
20	* 4405010607	FASCETTA MOTORE ANTERIORE	27	* 65562R0475	MOTOR 1 HP II
20	* 4405010608	FASCETTA MOTORE ANTERIORE	27	* 65563R0475	MOTOR 1 HP III
21	* 4405010609	CUSCINETTO MOTORE < 1 HP	27	* 65564R0475	MOTOR 1,5 HP II
21	* 4405010610	CUSCINETTO MOTORE 1,5 - 3 HP	27	* 65565R0475	MOTOR 1,5 HP III
21	* 4405012039	CUSCINETTO ANTERIORE & POSTERIORE	27	* 65566R0475	MOTOR 2 HP II
22	* 4405010612	COPERCHIO MOTORE MEC. C.71 C/CASSIERA D35	27	* 65567R0475	MOTOR 2 HP III
22	* 4405010614	COPERCHIO MOTORE MEC. C.80 C/CASSIERA D47	27	* 65569R0475	MOTOR 3 HP II
22	* 4405010615	COPERCHIO MOTORE MEC. C.90 C/CASSIERA D52	27	* 65570R0475	MOTOR 3 HP III

*** -> SI FACCIA RIFERIMENTO AL FOGLIO DELLE OSSERVAZIONI**

CODICE **65557, 65558, 65560, 65561, 65562, 65563, 65564, 65565, 65566, 65567, 65569, 65570**

DESCRIZIONE: **POMPA VICTORIA PLUS SILENT**

OSSERVAZIONI

POS	CODICE	OSSERVAZIONI
6	4405010106	PER: 65557, 65558, 65560, 65561, 65562, 65563
6	4405010107	PER: 65564, 65565, 65566, 65567, 65569, 65570
7	4405010717	PER: 65569, 65570
10	4405010588	PER: 65557, 65558, 65560, 65561, 65562, 65563
10	4405010492	PER: 65564, 65565, 65566, 65567, 65570
10	4405010589	PER: 65569
11	4405010112	PER: 65557, 65558, 65560, 65561, 65562, 65563
11	4405010113	PER: 65564, 65565, 65566, 65567, 65570
11	4405010180	PER: 65569
14	4405010115	PER: 65557, 65558, 65560, 65561
14	4405010116	PER: 65562, 65563, 65564, 65565, 65566, 65567
14	4405010117	PER: 65569, 65570
15	4405010134	PER: 65558, 65561, 65563, 65565, 65567, 65570
16	4405010591	PER: 65557 50 HZ
16	4405010667	PER: 65557 60 HZ
16	4405010592	PER: 65558 50 HZ
16	4405010668	PER: 65558 60 HZ
16	4405010593	PER: 65560 50 HZ
16	4405010669	PER: 65560 60 HZ
16	4405010594	PER: 65561 50 HZ
16	4405010670	PER: 65561 60 HZ
16	4405010595	PER: 65562 50 HZ
16	4405010671	PER: 65562 60 HZ
16	4405010596	PER: 65563 50 HZ
16	4405010672	PER: 65563 60 HZ
16	4405010597	PER: 65564 50 HZ
16	4405010673	PER: 65564 60 HZ
16	4405010598	PER: 65565 50 HZ
16	4405010674	PER: 65565 60 HZ
16	4405010599	PER: 65566 50 HZ
16	4405010675	PER: 65566 60 HZ
16	4405010600	PER: 65567 50 HZ
16	4405010676	PER: 65567 60 HZ
16	4405010601	PER: 65569 50 HZ
16	4405010677	PER: 65569 60 HZ
16	4405010602	PER: 65570 50 HZ
16	4405010678	PER: 65570 60 HZ
20	4405010604	PER: 65557, 65558, 65560, 65561, 65562, 65563
20	4405010607	PER: 65564, 65565, 65566, 65567, 65570
20	4405010608	PER: 65569
21	4405010609	PER: 65557, 65558, 65560, 65561, 65562, 65563
21	4405010610	PER: 65564, 65565, 65566, 65567, 65570

CODICE **65557, 65558, 65560, 65561, 65562, 65563, 65564, 65565, 65566, 65567, 65569, 65570**

DESCRIZIONE: **POMPA VICTORIA PLUS SILENT**

21	4405012039	PER: 65569
22	4405010612	PER: 65557, 65558, 65560, 65561, 65562, 65563
22	4405010614	PER: 65564, 65565, 65566, 65567, 65570
22	4405010615	PER: 65569
23	4405010144	PER: 65557, 65558, 65560, 65561, 65562, 65563
23	4405010145	PER: 65564, 65565, 65566, 65567, 65570
23	4405010169	PER: 65569
24	4405010635	PER: 65557, 65558, 65560, 65561, 65562, 65563
24	4405010636	PER: 65564, 65565, 65566, 65567, 65570
24	4405010637	PER: 65569
25	4405010149	PER: 65557
25	4405020121	PER: 65560
25	4405020122	PER: 65562
25	4405010150	PER: 65564
25	4405010174	PER: 65566
25	4405010175	PER: 65569
26	4405010154	PER: 65557, 65560, 65562 MOTOR AURICPOOL
26	4405012048	PER: 65564, 65566, 65569
26	4405010156	PER: 65558, 65561, 65563 MOTOR AURICPOOL
26	4405012051	PER: 65565, 65567, 65570
26	4405012047	PER: 65557, 65560, 65562 MOTOR VERNIS
26	4405012050	PER: 65558, 65561, 65563 MOTOR VERNIS
27	65557R0475	PER: 65557
27	65558R0475	PER: 65558
27	65560R0475	PER: 65560
27	65561R0475	PER: 65561
27	65562R0475	PER: 65562
27	65563R0475	PER: 65563
27	65564R0475	PER: 65564
27	65565R0475	PER: 65565
27	65566R0475	PER: 65566
27	65567R0475	PER: 65567
27	65569R0475	PER: 65569
27	65570R0475	PER: 65570

ASTRALPOOL

EINZELTEILE

ÜBER.: **2** **1090**
DATUM: **16/02/2018**
BLATT: **1 / 4**

CODE **65557, 65558, 65560, 65561, 65562, 65563, 65564, 65565, 65566, 65567, 65569, 65570**

BESCHREIBURG: **PUMPE VICTORIA PLUS SILENT**

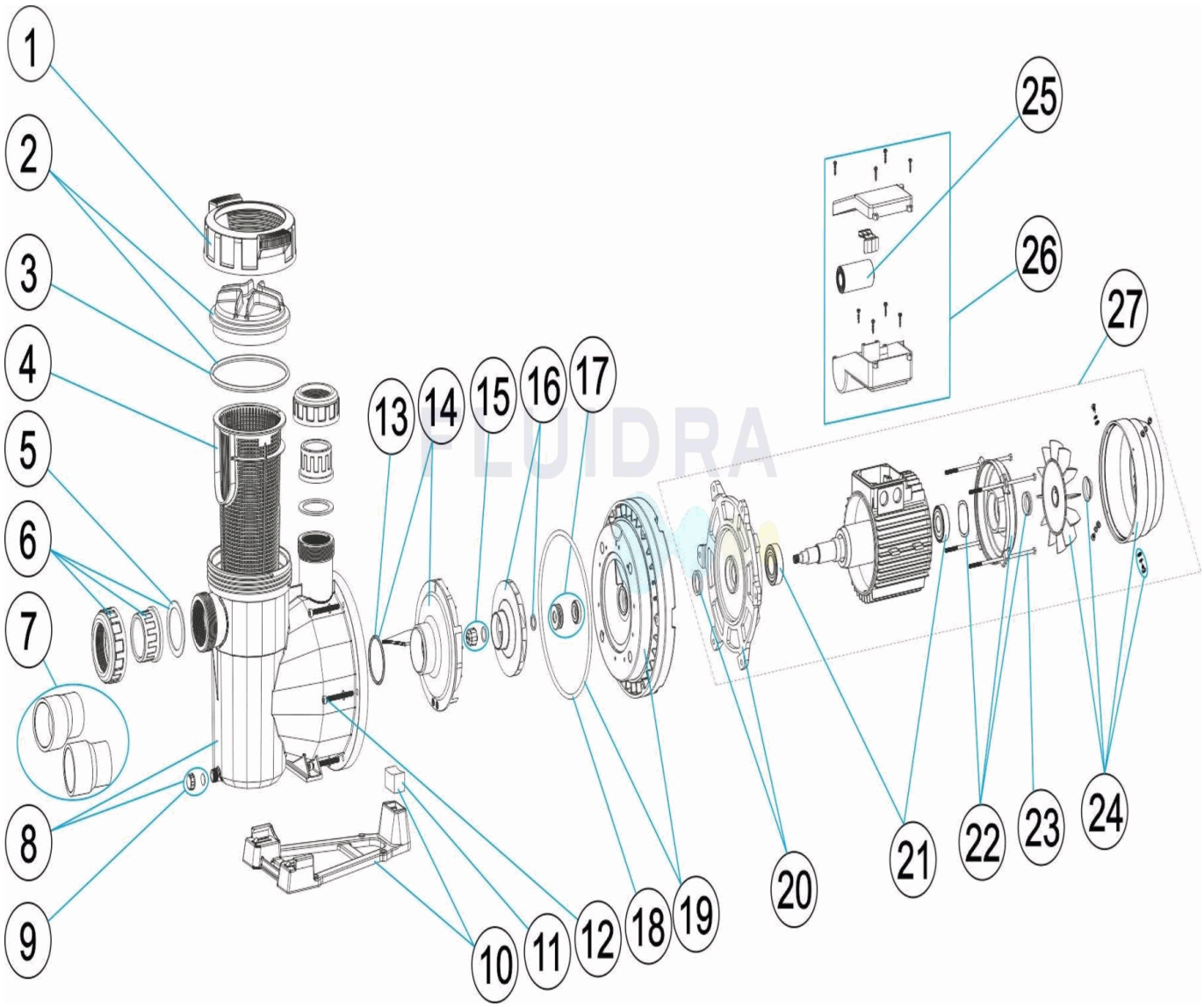

DEUTSCH

POS	CODE	BESCHREIBURG	POS	CODE	BESCHREIBURG
1	4405010585	MUTTER VORFILTERDECKEL	11	* 4405010113	VERBINDUNG HYDRAULIK-FUSS 1,5 HP - 3 HP
2	4405010702	VORFILTERDECKEL	11	* 4405010180	VERBINDUNG HYDRAULIK-FUSS 3 HP II
3	4405010178	O-RING D. 151,7 X 6,99	12	4405010590	FIXIERSCHRAUBE GEHÄUSE
4	4405010105	VORFILTERKORB	13	4405010161	O-RING D. 56,7 X 3,5
5	4405010179	FLACHDICHTUNG 72 X 55 X 2,5	14	* 4405010115	WASSERVERTEILER <=0,75 HP
6	* 4405010106	ANSCHLUSSZUBEHÖR <= 1 HP	14	* 4405010116	WASSERVERTEILER 1 HP - 2 HP
6	* 4405010107	ANSCHLUSSZUBEHÖR 1,5 HP - 2,5 HP	14	* 4405010117	WASSERVERTEILER 2,5 - 3 HP
7	* 4405010717	ANSCHLUSSZUBEHÖR 3 HP	15	* 4405010134	STOPFEN LAUFRAD M8 LINKS
8	4405010586	PUMPENGEHÄUSE	16	* 4405010591	LAUFRAD ½ (II) HP
9	4405010587	ABLASSSTOPFEN	16	* 4405010667	LAUFRAD ½ (II) HP 60 HZ
10	* 4405010588	PUMPENFUSS	16	* 4405010592	LAUFRAD ½ (III) HP
10	* 4405010492	PUMPENFUSS	16	* 4405010668	LAUFRAD ½ (III) HP 60 HZ
10	* 4405010589	PUMPENFUSS	16	* 4405010593	LAUFRAD ¾ (II) HP

*** -> SIEHE ANMERKUGSBLATT**

CODE **65557, 65558, 65560, 65561, 65562, 65563, 65564, 65565, 65566, 65567, 65569, 65570**

BESCHREIBURG: **PUMPE VICTORIA PLUS SILENT**

11	* 4405010112	VERBINDUNG HYDRAULIK-FUSS 0,75 - 1,5 HP	16	* 4405010669	LAUFRAD ¾ (II) HP 60 HZ
16	* 4405010594	LAUFRAD ¾ (III) HP	23	* 4405010144	RUNDEISEN MOTOR 0,75 - 1 HP
16	* 4405010670	LAUFRAD ¾ (III) HP 60 HZ	23	* 4405010145	RUNDEISEN MOTOR 1,5 - 3 HP III
16	* 4405010595	LAUFRAD 1 (II) HP	23	* 4405010169	RUNDEISEN MOTOR (90) 3 HP II
16	* 4405010671	LAUFRAD 1 (II) HP 60 HZ	24	* 4405010635	SET VENTILATOR - ABDECKUNG
16	* 4405010596	LAUFRAD 1 (III) HP	24	* 4405010636	SET VENTILATOR - ABDECKUNG
16	* 4405010672	LAUFRAD 1 (III) HP 60 HZ	24	* 4405010637	SET VENTILATOR - ABDECKUNG
16	* 4405010597	LAUFRAD 1,5 (II) HP	25	* 4405010149	KONDENSATOR 12 UF 1/2 CV
16	* 4405010673	LAUFRAD 1,5 (II) HP 60 HZ	25	* 4405020121	KONDENSATOR 14 UF 3/4 CV
16	* 4405010598	LAUFRAD 1,5 (III) HP	25	* 4405020122	KONDENSATOR 16 UF 1 CV
16	* 4405010674	LAUFRAD 1,5 (III) HP 60 HZ	25	* 4405010150	KONDENSATOR 18 UF 1,5 CV
16	* 4405010599	LAUFRAD 2 (II) HP	25	* 4405010174	KONDENSATOR 32 UF 2 CV
16	* 4405010675	LAUFRAD 2 (II) HP 60 HZ	25	* 4405010175	KONDENSATOR 40 UF 2,5 - 3 CV
16	* 4405010600	LAUFRAD 2 (III) HP	26	* 4405010154	SET KLEMMSCHRANK C. 63 - 71 II
16	* 4405010676	LAUFRAD 2 (III) HP 60 HZ	26	* 4405012048	SET KLEMMSCHRANK (MOTOR II) C.80
16	* 4405010601	LAUFRAD 3 (II) HP	26	* 4405010156	SET KLEMMSCHRANK C.63 - 71 III
16	* 4405010677	LAUFRAD 3 (II) HP 60 HZ	26	* 4405012051	SET KLEMMSCHRANK (MOTOR III) C.80
16	* 4405010602	LAUFRAD 3 (III) HP	26	* 4405012047	SET KLEMMSCHRANK (MOTOR II) C.71
16	* 4405010678	LAUFRAD 3 (III) HP 60 HZ	26	* 4405012050	SET KLEMMSCHRANK (MOTOR III) C.71
17	4405010118	GLEITRINGDICHTUNG	27	* 65557R0475	MOTOR ½ HP II
18	4405010487	O-RING	27	* 65558R0475	MOTOR ½ HP III
19	4405010603	GLEITRINGDICHTUNG	27	* 65560R0475	MOTOR 3/4 HP II
20	* 4405010604	VORDERER MOTORFLANSCH	27	* 65561R0475	MOTOR 3/4 HP III
20	* 4405010607	VORDERER MOTORFLANSCH	27	* 65562R0475	MOTOR 1 HP II
20	* 4405010608	VORDERER MOTORFLANSCH	27	* 65563R0475	MOTOR 1 HP III
21	* 4405010609	WÄLZLAGER MOTOR < 1 HP	27	* 65564R0475	MOTOR 1,5 HP II
21	* 4405010610	WÄLZLAGER MOTOR 1,5 - 3 HP	27	* 65565R0475	MOTOR 1,5 HP III
21	* 4405012039	VORDERES WÄLZLAGER	27	* 65566R0475	MOTOR 2 HP II
22	* 4405010612	MOTORDECKEL MECH. C.71 MIT RINGLAGER D35	27	* 65567R0475	MOTOR 2 HP III
22	* 4405010614	MOTORDECKEL MECH. C.80 MIT RINGLAGER D47	27	* 65569R0475	MOTOR 3 HP II
22	* 4405010615	MOTORDECKEL MECH. C.90 MIT RINGLAGER D52	27	* 65570R0475	MOTOR 3 HP III

*** -> SIEHE ANMERKUGSBLATT**

CODE **65557, 65558, 65560, 65561, 65562, 65563, 65564, 65565, 65566, 65567, 65569, 65570**

BESCHREIBURG: **PUMPE VICTORIA PLUS SILENT**

HINWEISE

POS	CODE	HINWEISE
6	4405010106	FÜR: 65557, 65558, 65560, 65561, 65562, 65563
6	4405010107	FÜR: 65564, 65565, 65566, 65567, 65569, 65570
7	4405010717	FÜR: 65569, 65570
10	4405010588	FÜR: 65557, 65558, 65560, 65561, 65562, 65563
10	4405010492	FÜR: 65564, 65565, 65566, 65567, 65570
10	4405010589	FÜR: 65569
11	4405010112	FÜR: 65557, 65558, 65560, 65561, 65562, 65563
11	4405010113	FÜR: 65564, 65565, 65566, 65567, 65570
11	4405010180	FÜR: 65569
14	4405010115	FÜR: 65557, 65558, 65560, 65561
14	4405010116	FÜR: 65562, 65563, 65564, 65565, 65566, 65567
14	4405010117	FÜR: 65569, 65570
15	4405010134	FÜR: 65558, 65561, 65563, 65565, 65567, 65570
16	4405010591	FÜR: 65557 50 HZ
16	4405010667	FÜR: 65557 60 HZ
16	4405010592	FÜR: 65558 50 HZ
16	4405010668	FÜR: 65558 60 HZ
16	4405010593	FÜR: 65560 50 HZ
16	4405010669	FÜR: 65560 60 HZ
16	4405010594	FÜR: 65561 50 HZ
16	4405010670	FÜR: 65561 60 HZ
16	4405010595	FÜR: 65562 50 HZ
16	4405010671	FÜR: 65562 60 HZ
16	4405010596	FÜR: 65563 50 HZ
16	4405010672	FÜR: 65563 60 HZ
16	4405010597	FÜR: 65564 50 HZ
16	4405010673	FÜR: 65564 60 HZ
16	4405010598	FÜR: 65565 50 HZ
16	4405010674	FÜR: 65565 60 HZ
16	4405010599	FÜR: 65566 50 HZ
16	4405010675	FÜR: 65566 60 HZ
16	4405010600	FÜR: 65567 50 HZ
16	4405010676	FÜR: 65567 60 HZ
16	4405010601	FÜR: 65569 50 HZ
16	4405010677	FÜR: 65569 60 HZ
16	4405010602	FÜR: 65570 50 HZ
16	4405010678	FÜR: 65570 60 HZ
20	4405010604	FÜR: 65557, 65558, 65560, 65561, 65562, 65563
20	4405010607	FÜR: 65564, 65565, 65566, 65567, 65570
20	4405010608	FÜR: 65569
21	4405010609	FÜR: 65557, 65558, 65560, 65561, 65562, 65563
21	4405010610	FÜR: 65564, 65565, 65566, 65567, 65570

CODE **65557, 65558, 65560, 65561, 65562, 65563, 65564, 65565, 65566, 65567, 65569, 65570**

BESCHREIBURG: **PUMPE VICTORIA PLUS SILENT**

21	4405012039	FÜR: 65569
22	4405010612	FÜR: 65557, 65558, 65560, 65561, 65562, 65563
22	4405010614	FÜR: 65564, 65565, 65566, 65567, 65570
22	4405010615	FÜR: 65569
23	4405010144	FÜR: 65557, 65558, 65560, 65561, 65562, 65563
23	4405010145	FÜR: 65564, 65565, 65566, 65567, 65570
23	4405010169	FÜR: 65569
24	4405010635	FÜR: 65557, 65558, 65560, 65561, 65562, 65563
24	4405010636	FÜR: 65564, 65565, 65566, 65567, 65570
24	4405010637	FÜR: 65569
25	4405010149	FÜR: 65557
25	4405020121	FÜR: 65560
25	4405020122	FÜR: 65562
25	4405010150	FÜR: 65564
25	4405010174	FÜR: 65566
25	4405010175	FÜR: 65569
26	4405010154	FÜR: 65557, 65560, 65562 MOTOR AURICPOOL
26	4405012048	FÜR: 65564, 65566, 65569
26	4405010156	FÜR: 65558, 65561, 65563 MOTOR AURICPOOL
26	4405012051	FÜR: 65565, 65567, 65570
26	4405012047	FÜR: 65557, 65560, 65562 MOTOR VERNIS
26	4405012050	FÜR: 65558, 65561, 65563 MOTOR VERNIS
27	65557R0475	FÜR: 65557
27	65558R0475	FÜR: 65558
27	65560R0475	FÜR: 65560
27	65561R0475	FÜR: 65561
27	65562R0475	FÜR: 65562
27	65563R0475	FÜR: 65563
27	65564R0475	FÜR: 65564
27	65565R0475	FÜR: 65565
27	65566R0475	FÜR: 65566
27	65567R0475	FÜR: 65567
27	65569R0475	FÜR: 65569
27	65570R0475	FÜR: 65570

ASTRALPOOL	ITEM	REV.: **2** DATA: **16/02/2018** FOLHA: **1 / 4**	**1090**

CODIGO **65557, 65558, 65560, 65561, 65562, 65563, 65564, 65565, 65566, 65567, 65569, 65570**

DESCRICÃO: **BOMBA VICTORIA PLUS SILENT**

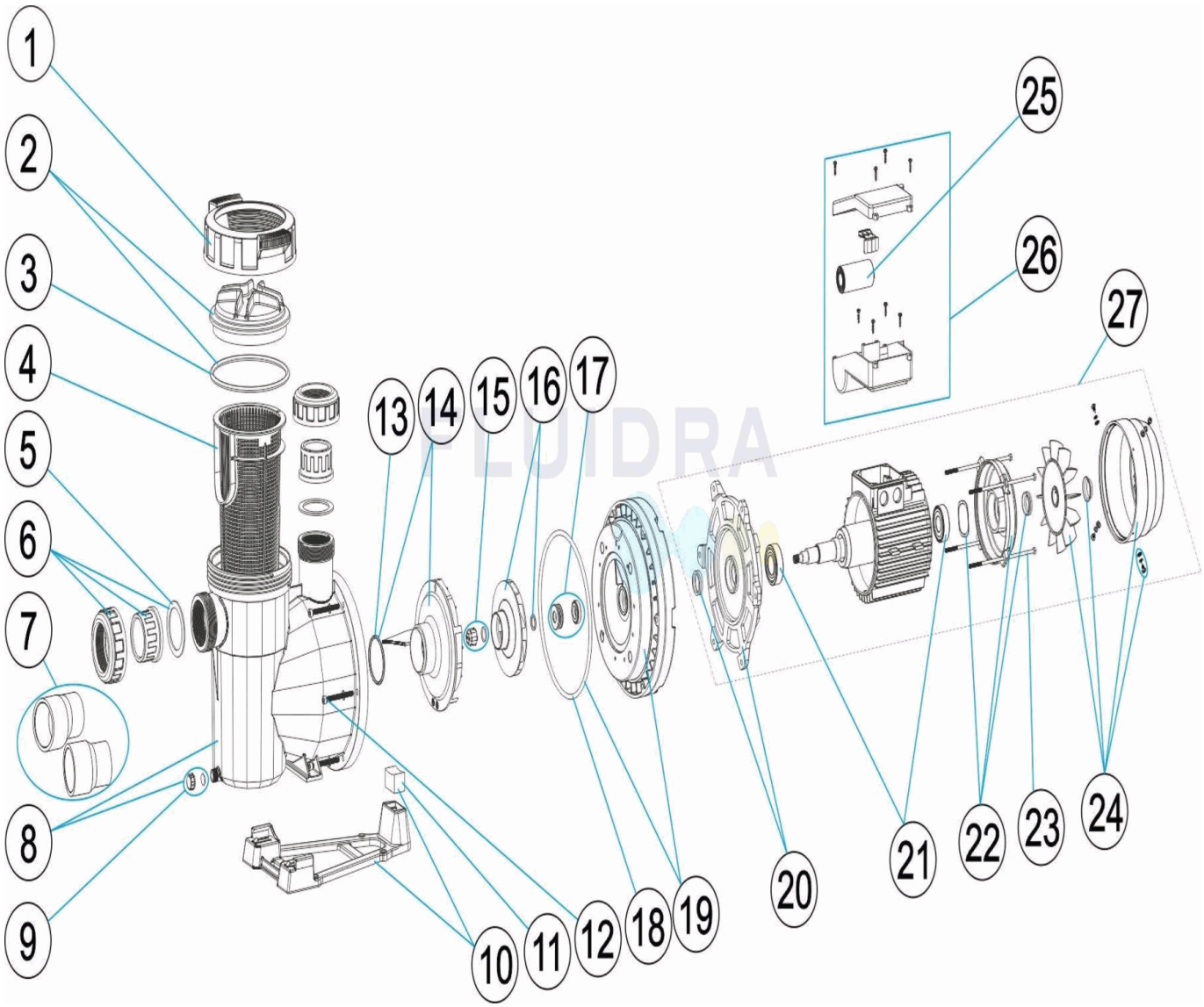

PORTUGUES

POS	CODIGO	DESCRICÃO	POS	CODIGO	DESCRICÃO
1	4405010585	PORCA TAMPA PRE-FILTRO	11	* 4405010113	UNIÃO HIDRÁULICA PIE 1,5 HP - 3 HP
2	4405010702	TAMPA PRÉ-FILTRO	11	* 4405010180	UNIÃO HIDRÁULICA PIE 3 HP II
3	4405010178	JUNTA TÓRICA D 151,7X6,99	12	4405010590	PARAFUSO M6X65 DIN 912
4	4405010105	CESTO PRÉ-FILTRO	13	4405010161	JUNTA TÓRICA D 56,7X3,5
5	4405010179	JUNTA PLANA 72X55X2,5	14	* 4405010115	DIFUSOR <=0,75 HP
6	* 4405010106	ACESSÓRIOS DE UNIÃO <= 1 HP	14	* 4405010116	DIFUSOR 1 HP - 2 HP
6	* 4405010107	ACESSÓRIOS DE UNIÃO 1,5 HP - 2,5 HP	14	* 4405010117	DIFUSOR 2,5 - 3 HP
7	* 4405010717	ACESSÓRIOS DE UNIÃO 3 HP	15	* 4405010134	TAMPO RODIZIO M8 ESQ.
8	4405010586	CORPO BOMBA	16	* 4405010591	RODÍZIO ½ (II) HP
9	4405010587	TAMPÃO PURGA	16	* 4405010667	RODÍZIO ½ (II) HP
10	* 4405010588	PÉ BOMBA	16	* 4405010592	RODÍZIO ½ (III) HP
10	* 4405010492	PÉ BOMBA	16	* 4405010668	RODÍZIO ½ (III) HP 60 HZ
10	* 4405010589	PÉ BOMBA	16	* 4405010593	RODÍZIO ¾ (II) HP

*** -> VEJA A FICHA DE OBSERVACÕES**

CODIGO **65557, 65558, 65560, 65561, 65562, 65563, 65564, 65565, 65566, 65567, 65569, 65570**

DESCRICÃO: **BOMBA VICTORIA PLUS SILENT**

11	* 4405010112	UNIÃO HIDRÁULICA PIE 0,75 - 1,5 HP	16	* 4405010669	RODÍZIO ¾ (II) HP 60 HZ
16	* 4405010594	RODÍZIO ¾ (III) HP	23	* 4405010144	VARETAS MOTOR 0,75 - 1 HP
16	* 4405010670	RODÍZIO ¾ (III) HP 60 HZ	23	* 4405010145	VARETAS MOTOR 1,5 - 3 HP III
16	* 4405010595	RODÍZIO 1 (II) HP	23	* 4405010169	VARETAS MOTOR (90) 3 HP II
16	* 4405010671	RODÍZIO 1 (II) HP 60 HZ	24	* 4405010635	CONJUNTO VENTILLADOR-TAMPA
16	* 4405010596	RODÍZIO 1 (III) HP	24	* 4405010636	CONJUNTO VENTILLADOR-TAMPA
16	* 4405010672	RODÍZIO 1 (III) HP 60 HZ	24	* 4405010637	CONJUNTO VENTILLADOR-TAMPA
16	* 4405010597	RODÍZIO 1,5 (II) HP	25	* 4405010149	CONDENSADOR 12 UF 1/2 CV
16	* 4405010673	RODÍZIO 1,5 (II) HP 60 HZ	25	* 4405020121	CONDENSADOR 14 UF 3/4 CV
16	* 4405010598	RODÍZIO 1,5 (III) HP	25	* 4405020122	CONDENSADOR 16 UF 1 CV
16	* 4405010674	RODÍZIO 1,5 (III) HP 60 HZ	25	* 4405010150	CONDENSADOR 18 UF 1,5 CV
16	* 4405010599	RODÍZIO 2 (II) CV	25	* 4405010174	CONDENSADOR 32 ?F 2 CV
16	* 4405010675	RODÍZIO 2 (II) CV 60 HZ	25	* 4405010175	CONDENSATEUR 40 ?F 2,5-3 CV
16	* 4405010600	RODÍZIO 2 (III) HP	26	* 4405010154	CONJUNTO CAIXA LIGAÇOES C. 63-71 II
16	* 4405010676	RODÍZIO 2 (III) HP 60 HZ	26	* 4405012048	CJTO. CAIXA TERMINAIS (MOTOR II) C.80
16	* 4405010601	RODÍZIO 3 (II) HP	26	* 4405010156	TAMPA CAIXA BORNES C 63-71 III
16	* 4405010677	RODÍZIO 3 (II) HP 60 HZ	26	* 4405012051	CJTO. CAIXA TERMINAIS (MOTOR III) C.80
16	* 4405010602	RODÍZIO 3 (III) HP	26	* 4405012047	CJTO. CAIXA TERMINAIS (MOTOR II) C.71
16	* 4405010678	RODÍZIO 3 (III) HP 60 HZ	26	* 4405012050	CJTO. CAIXA TERMINAIS (MOTOR III) C.71
17	4405010118	JUNTA MECÂNICA	27	* 65557R0475	MOTOR ½ HP II
18	4405010487	JUNTA TÓRICA	27	* 65558R0475	MOTOR ½ HP III
19	4405010603	FLANGE DO SELO MECÃNICO	27	* 65560R0475	MOTOR 3/4 HP II
20	* 4405010604	FLANGE MOTOR DIANTEIRA	27	* 65561R0475	MOTOR 3/4 HP III
20	* 4405010607	FLANGE MOTOR DIANTEIRA	27	* 65562R0475	MOTOR 1 HP II
20	* 4405010608	FLANGE MOTOR DIANTEIRA	27	* 65563R0475	MOTOR 1 HP III
21	* 4405010609	ROLAMENTO MOTOR < 1 HP	27	* 65564R0475	MOTOR 1,5 HP II
21	* 4405010610	ROLAMENTO MOTOR 1,5 - 3 HP	27	* 65565R0475	MOTOR 1,5 HP III
21	* 4405012039	ROLAMENTO DIANTEIRO & TRASEIRO	27	* 65566R0475	MOTOR 2 HP II
22	* 4405010612	TAMPA MOTOR MEC. C.71 C/RANHURA D35	27	* 65567R0475	MOTOR 2 HP III
22	* 4405010614	TAMPA MOTOR MEC. C.80 C/RANHURA D47	27	* 65569R0475	MOTOR 3 HP II
22	* 4405010615	TAMPA MOTOR MEC. C.90 C/RANHURA D52	27	* 65570R0475	MOTOR 3 HP III

*** -> VEJA A FICHA DE OBSERVACÕES**

CODIGO **65557, 65558, 65560, 65561, 65562, 65563, 65564, 65565, 65566, 65567, 65569, 65570**

DESCRICÃO: **BOMBA VICTORIA PLUS SILENT**

OBSERVACÕES

POS	CODIGO	OBSERVACÕES
6	4405010106	PARA: 65557, 65558, 65560, 65561, 65562, 65563
6	4405010107	PARA: 65564, 65565, 65566, 65567, 65569, 65570
7	4405010717	PARA: 65569, 65570
10	4405010588	PARA: 65557, 65558, 65560, 65561, 65562, 65563
10	4405010492	PARA: 65564, 65565, 65566, 65567, 65570
10	4405010589	PARA: 65569
11	4405010112	PARA: 65557, 65558, 65560, 65561, 65562, 65563
11	4405010113	PARA: 65564, 65565, 65566, 65567, 65570
11	4405010180	PARA: 65569
14	4405010115	PARA: 65557, 65558, 65560, 65561
14	4405010116	PARA: 65562, 65563, 65564, 65565, 65566, 65567
14	4405010117	PARA: 65569, 65570
15	4405010134	PARA: 65558, 65561, 65563, 65565, 65567, 65570
16	4405010591	PARA: 65557 50 HZ
16	4405010667	PARA: 65557 60 HZ
16	4405010592	PARA: 65558 50 HZ
16	4405010668	PARA: 65558 60 HZ
16	4405010593	PARA: 65560 50 HZ
16	4405010669	PARA: 65560 60 HZ
16	4405010594	PARA: 65561 50 HZ
16	4405010670	PARA: 65561 60 HZ
16	4405010595	PARA: 65562 50 HZ
16	4405010671	PARA: 65562 60 HZ
16	4405010596	PARA: 65563 50 HZ
16	4405010672	PARA: 65563 60 HZ
16	4405010597	PARA: 65564 50 HZ
16	4405010673	PARA: 65564 60 HZ
16	4405010598	PARA: 65565 50 HZ
16	4405010674	PARA: 65565 60 HZ
16	4405010599	PARA: 65566 50 HZ
16	4405010675	PARA: 65566 60 HZ
16	4405010600	PARA: 65567 50 HZ
16	4405010676	PARA: 65567 60 HZ
16	4405010601	PARA: 65569 50 HZ
16	4405010677	PARA: 65569 60 HZ
16	4405010602	PARA: 65570 50 HZ
16	4405010678	PARA: 65570 60 HZ
20	4405010604	PARA: 65557, 65558, 65560, 65561, 65562, 65563
20	4405010607	PARA: 65564, 65565, 65566, 65567, 65570
20	4405010608	PARA: 65569
21	4405010609	PARA: 65557, 65558, 65560, 65561, 65562, 65563
21	4405010610	PARA: 65564, 65565, 65566, 65567, 65570

CODIGO **65557, 65558, 65560, 65561, 65562, 65563, 65564, 65565, 65566, 65567, 65569, 65570**

DESCRICÃO: **BOMBA VICTORIA PLUS SILENT**

21	4405012039	PARA: 65569
22	4405010612	PARA: 65557, 65558, 65560, 65561, 65562, 65563
22	4405010614	PARA: 65564, 65565, 65566, 65567, 65570
22	4405010615	PARA: 65569
23	4405010144	PARA: 65557, 65558, 65560, 65561, 65562, 65563
23	4405010145	PARA: 65564, 65565, 65566, 65567, 65570
23	4405010169	PARA: 65569
24	4405010635	PARA: 65557, 65558, 65560, 65561, 65562, 65563
24	4405010636	PARA: 65564, 65565, 65566, 65567, 65570
24	4405010637	PARA: 65569
25	4405010149	PARA: 65557
25	4405020121	PARA: 65560
25	4405020122	PARA: 65562
25	4405010150	PARA: 65564
25	4405010174	PARA: 65566
25	4405010175	PARA: 65569
26	4405010154	PARA: 65557, 65560, 65562 MOTOR AURICPOOL
26	4405012048	PARA: 65564, 65566, 65569
26	4405010156	PARA: 65558, 65561, 65563 MOTOR AURICPOOL
26	4405012051	PARA: 65565, 65567, 65570
26	4405012047	PARA: 65557, 65560, 65562 MOTOR VERNIS
26	4405012050	PARA: 65558, 65561, 65563 MOTOR VERNIS
27	65557R0475	PARA: 65557
27	65558R0475	PARA: 65558
27	65560R0475	PARA: 65560
27	65561R0475	PARA: 65561
27	65562R0475	PARA: 65562
27	65563R0475	PARA: 65563
27	65564R0475	PARA: 65564
27	65565R0475	PARA: 65565
27	65566R0475	PARA: 65566
27	65567R0475	PARA: 65567
27	65569R0475	PARA: 65569
27	65570R0475	PARA: 65570